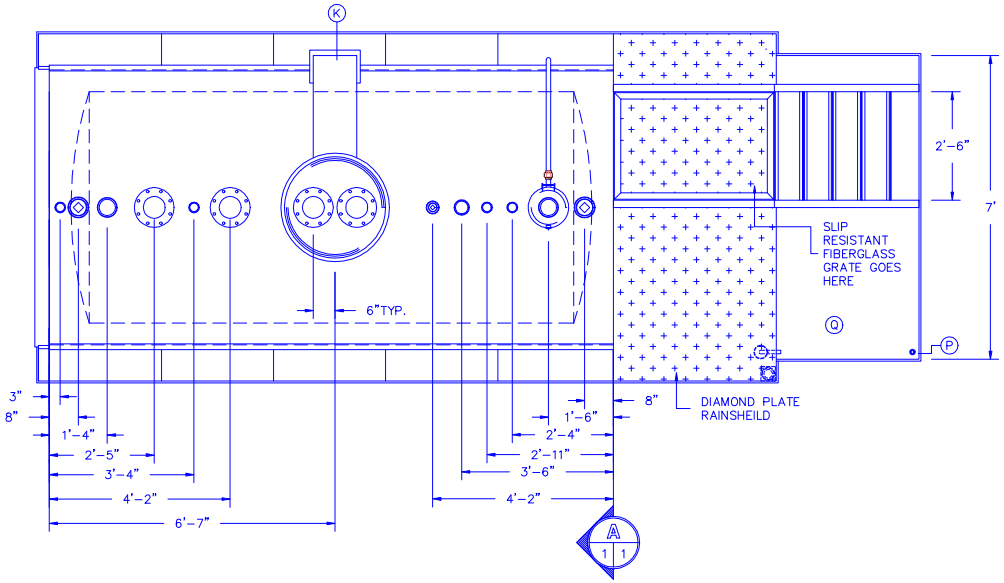

2000 GAL TANK PLAN

SCALE : 1"=2'-6"

NOTES:

1. TANK TO HAVE TWO HOUR FIRE RATING AND TO BE LISTED AND LABELED BY UL – UL2085.

2. PRIMARY TANK TO BE FACTORY HYDRO TESTED TO 30 PSIG. INTERSTITIAL SPACE TO BE TESTED TO 5 PSIG.

3. ALL STEEL (EXCEPT INSIDE OF TANK) SHALL BE BLASTED TO AN SP6 AND FINISHED WITH A WHITE EPOXY COATING.

ITEM	DESCRIPTION
A	2" MONITORING PIPE
B	4" FITTING
C	4" CAST IRON PLUG
D	-----
E	2" PIPE TOE
F	2" CPLG
G	4" PIPE TOE
H	4" CPLG
I	3" PIPE TOE
J	3" CPLG
K	VENT DEFLECTOR ASSEMBLY – SHIP LOOSE
L	6" PIPE
M	6" – 8OZ EMERGENCY VENT – SHIP LOOSE
N	6" PIPE THRU OUTER SHELL ONLY
O	EMERGENCY VENT OVERFLOW CHUTE
P	1/2" DRAIN FITTING WITH PLUG
Q	DRIP PAN TYPE PLATFORM WITH 2" LIP
R	3/4" SCH40 PUMPOUT PIPE TOE
S	3" PIPE CAP SUMP
T	6" I BEAM SUPPORTS
U	2" FITTING WITH CAST IRON PLUG
V	FILL CONTAINMENT CHAMBER
W	OSHA STAIRS – SHIP LOOSE
X	-----
Y	-----
Z	6" PIPE THRU OUTER SHELL OF PRIMARY ONLY
a	2" FNPT FITTING
b	6"x6"x¼" PLATE
c	6" x 150 # RFF

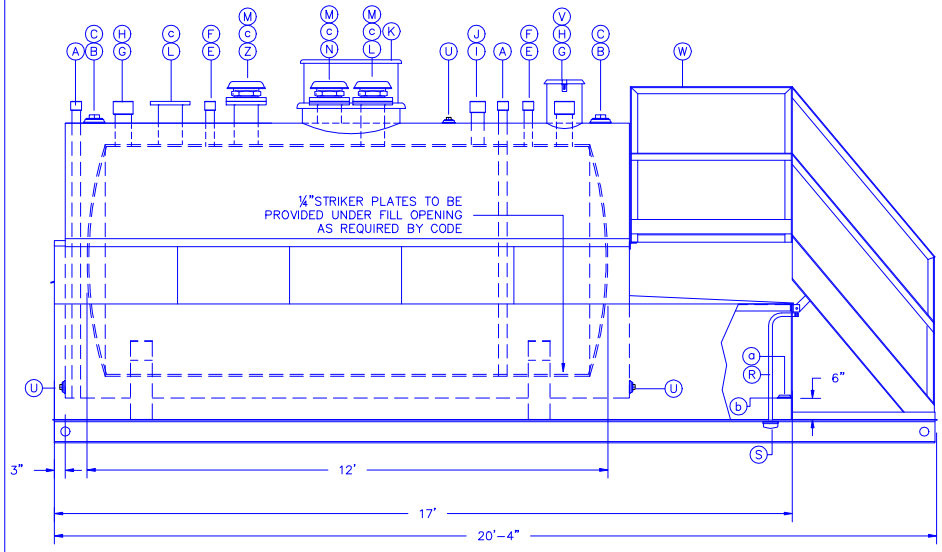

2000 GAL TANK ELEVATION

SCALE : 1"=2'-6"

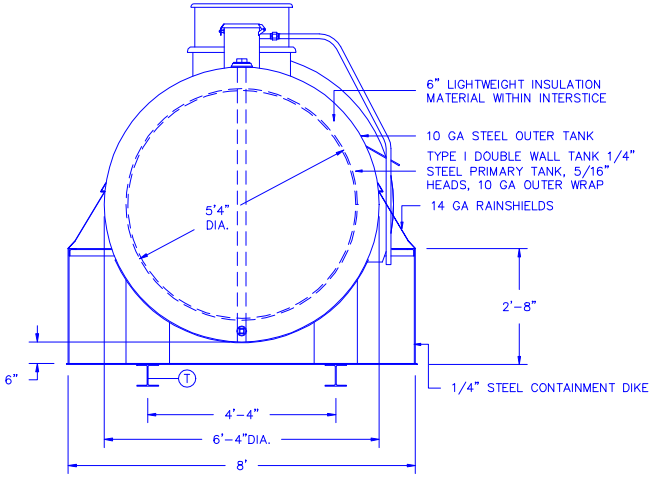

TANK SECTION A-A

SCALE : 1"=2'-6"

AREO-POWER
UNITIZED FUELER,INC.
103 SMITHTOWN BLVD
SMITHTOWN, NY 11787

DRAWING TITLE

2000 GAL D/W
AREO–POWER DIKED FIREGUARD TANK FOR NEW YORK CITY

REV	DATE	BY	REVISION DESCRIPTION

CONSTRUCTION APPROVAL

PRINT NAME

SIGNATURE

DATE

ALL RIGHTS RESERVED. THIS DRAWING OR ANY PART THEREOF MUST NOT BE REPRODUCED IN ANY FORM WITHOUT WRITTEN PERMISSION OF AREO–POWER UNITIZED FUELER, INC.

DWG NO: NYC–2K–FG	
SCALE: 1"=3'–0"	DWN BY: JF
SHEET: 1 OF 1	DATE: 1/20/97