NOTE: ALL RIGHTS RESERVED. THIS DRAWING MUST NOT BE REPRODUCED IN ANY FORM WITHOUT THE WRITTEN PERMISSION OF AREO–POWER®. AREO–POWER® SHALL BE RESPONSIBLE ONLY FOR ITEMS INDICATED ON THIS FABRICATION DRAWING UNLESS OTHERWISE NOTED. CUSTOMER IS RESPONSIBLE FOR VERIFYING CORRECTNESS OF SIZE AND LOCATION OF FITTINGS, ACCESSORIES, AND COATINGS SHOWN ON THIS DRAWING.

TOUCH UP OF FINISHED PAINT IS REQUIRED BY INSTALLATION CONTRACTOR. TOUCH UP PAINT SHIPPED WITH TANK.

NOTES:
STRIKER PLATES ARE NOT SUPPLIED ON FIREGUARDS® UNLESS SPECIFIED

SHIP LOOSE

(2) 6" FLANGED EMERGENCY VENTS

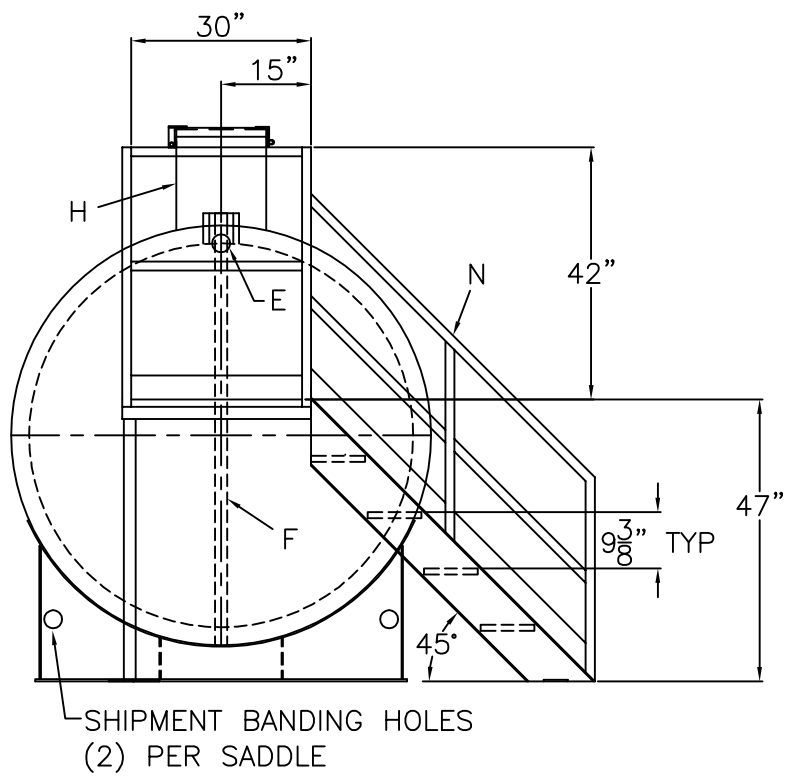


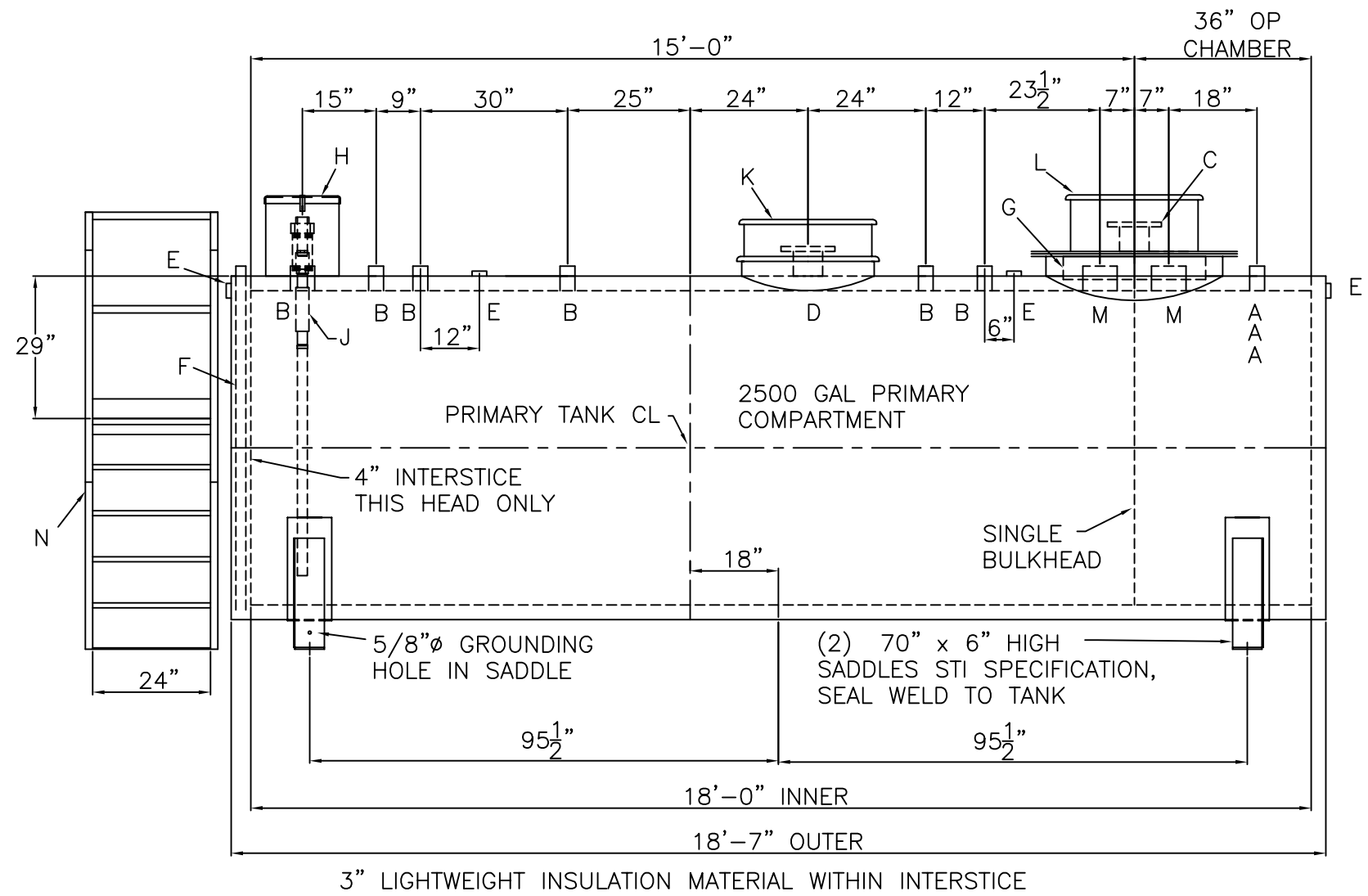


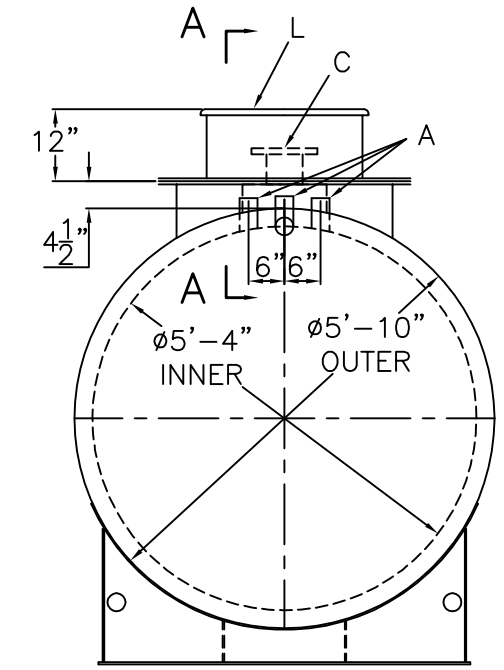


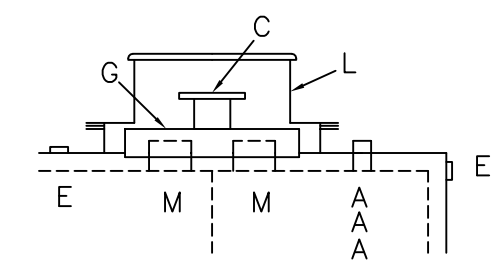


SECTION A–A

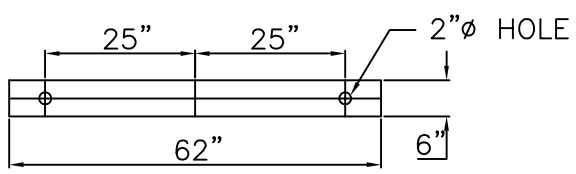


BASE PLATE DETAIL

## DESIGN DATA

| |
|---|
| CAPACITY : 2,500 GALLONS |
| TYPE: FIREGUARD® CYLINDRICAL WITH 20% OP CHAMBER |
| FIREGUARD® IS A TRADEMARK OF THE STEEL TANK INSTITUTE |
| NO. REQ. – 1 |
| OPERATING PRESSURE – ATMOSPHERIC |
| SPECIFIC GRAVITY = 1.0 |
| TANK MATERIAL – MILD CARBON STEEL |
| THICKNESS – INNER – HEADS AND SHELL – 7 GAUGE<br>THICKNESS – OUTER – HEADS AND SHELL – 7 GAUGE<br>MIN. GAUGE OR THICKNESS (PER U.L. 2085) |
| CONSTRUCTION – INNER – LAP WELD OUTSIDE ONLY<br>CONSTRUCTION – OUTER – LAP WELD OUTSIDE ONLY |
| TANK TEST – PER UL 2085 |
| INT. FINISH – NONE |
| EXT. FINISH – SP–6 BLAST, FINISH PAINT WHITE |
| LABEL– UL 2085 AND FIREGUARD® PER sti |

## LEGEND

| | |
|---|---|
| A | 2" FEMALE FIREGUARD COUPLING |
| B | 4" FEMALE FIREGUARD COUPLING |
| C | 6" FFSO 150# FLANGE – PRIMARY EMERGENCY VENT USE ONLY (MOUNTED IN "G" TOP) |
| D | 6" FFSO 150# FLANGE THROUGH OUTER SHELL ONLY, MARK WITH SPECIAL WARNING LABEL INTERSTITIAL EMERGENCY VENT USE ONLY |
| E | 2" FITTING THROUGH OUTER SHELL ONLY WITH CAST IRON PLUG– MFG USE ONLY |
| F | 2" INTERSTITIAL MONITOR PIPE – MALE NPT END |
| G | 29" LONG x 14" WIDE x 4" HIGH CLOSED TOP STEEL ENCLOSURE, WELDED TO TANK OUTER SHELL |
| H | 10 GAL SPILL CHAMBER WITH HINGE & HASP– APPROX 15"ø X 13–1/2" HIGH., WELD TO TANK. |
| J | INSTALLED 2" OVERFILL PREVENTION VALVE WITH 2" FEMALE THREADED TOP AND DROP PIPE VALVE TO BE SET FOR 90% OR 95% – PLEASE INDICATE DESIRED SETTING (CIRCLE ONE) |
| K | EMERGENCY VENT CHAMBER |
| L | 36" x 1/4" PLATE TIGHT BOLT MANWAY WELDED TO TANK OUTER WALL ONLY, 1/8" THK. NEO–CORK GASKET AND 12" HIGH EMERGENCY VENT CHAMBER – EXTENSION TO SHIP LOOSE FOR INSTALLATION ON SITE BY OTHERS |
| M | 6" FEMALE FIREGUARD COUPLING |
| N | 47" HIGH STANDARD AREO–POWER FREE STANDING STAIR & PLATFORM ASSEMBLY, PAINT: SAFETY YELLOW AND SHIP LOOSE FOR INSTALLATION ON SITE BY OTHERS |

AREO–POWER ®

PATENT NUMBER 5346093

2,500 GAL 64"ø CYL. OP FIREGUARD®

PATENT: 5,695,089 PATENT: 5,809,650

CUSTOMER:

PROJECT:

QUOTE NO:

CHK'D BY:

| SCALE: | DATE: | DWG. BY: | DWG. NO.: |
|---|---|---|---|
| 3/8" = 12" | | | 77186 |