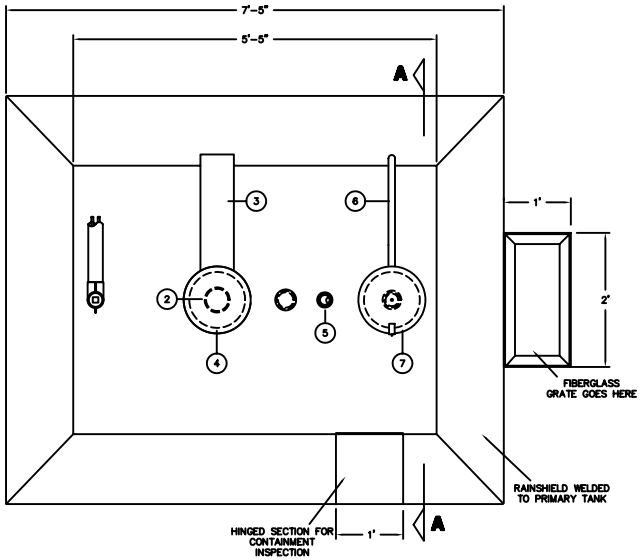

500 GAL FUEL OIL TANK - PLAN

SCALE : 1"=2'-0"

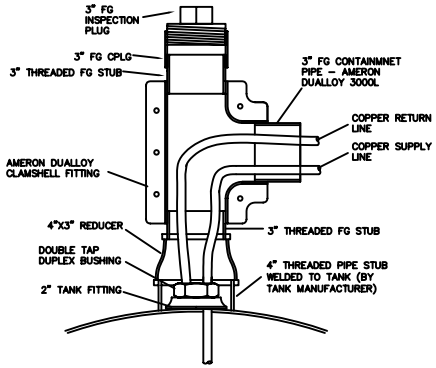

DW PIPING TERMINATION DETAIL

SCALE : NONE

ITEM	DESCRIPTION
1	———
2	4"-8 OZ. EMERGENCY VENT - SHIP LOOSE
3	EMERGENCY VENT OVERFLOW CHUTE
4	VENT DEFLECTOR ASSEMBLY
5	2" LEVEL GAUGE - SKULLY GOLDEN GAUGE
6	1" OVERFLOW PIPE
7	FILL CONTAINMENT CHAMBER
8	———
9	———
10	———
11	OPW 2" ALUMINUM NORMAL VENT CAP
12	2" FILL ADAPTER AND CAP
13	———
14	2" VENT WHISTLE
15	———
16	1 1/2" L (2)
17	2" FNPT FITTING
18	4" PIPE STUB T.O.E.

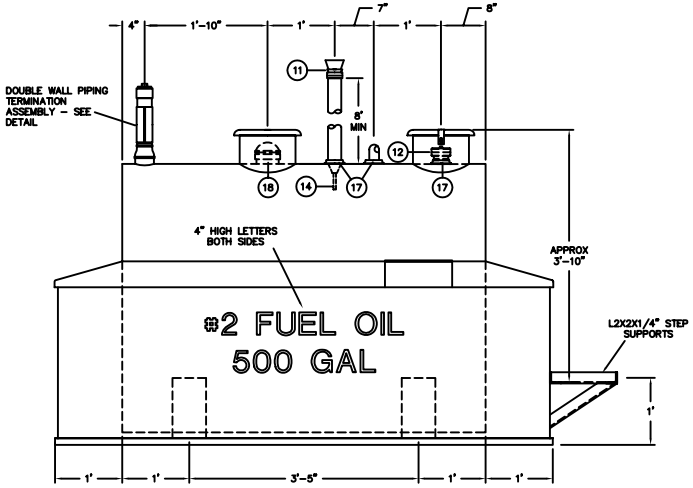

500 GAL FUEL OIL TANK - ELEVATION

SCALE : 1"=2'-0"

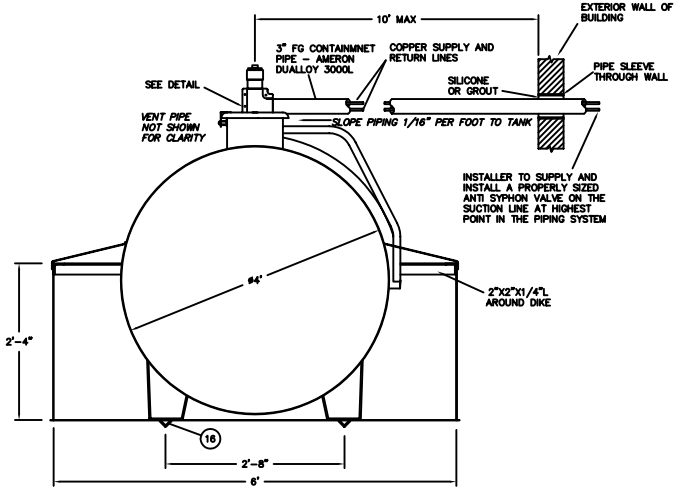

500 GAL FUEL OIL TANK - SECTION AA

SCALE : 1"=2'-0"

NOTES:

1. PRIMARY TANK:
   SHELL - 12 GA. HEAD - 12 GA.
   CONTAINMENT: 12 GA.
2. MATERIAL - MILD CARBON STEEL
3. FACTORY TEST AT 5-7 PSIG.
4. ENTIRE UNIT UL LISTED AND ARE FOR OUTDOOR USE.
5. EXTERIOR FINISH (INCLUDING INTERIOR OF DIKE) - SSPC-SP7 (BRUSH OFF BLAST CLEANING & MAB PLYMASTIC 101 WHITE EPOXY.
6. ALL DIMENSIONS ARE APPROXIMATE.
7. CONTAINMENT CAPACITY >150%
8. PRIMARY TANK SHELL AND HEAD WELDS TO BE AS SPECIFIED IN UL142.
9. ANY JOINT NOT DETAILED SHALL BE A CONTINUOS FULL FILLET WELD
10. A 8' WIDE X 10' LONG X 8" THICK CONCRETE PAD REINFORCED WITH 6X6 10-10 WWM MUST BE PROVIDED. TANKS LOCATED IN HEAVILY TRAFFICKED AREAS MUST BE PROTECTED BY TRAFFIC BOLLARDS. THE BOLLARDS MUST BE MADE OF SCH80 STEEL PIPE, CONCRETE FILLED AND SET IN THE GROUND TO A DEPTH OF 4'. THE BOLLARDS WILL BE SET IN CONCRETE FOOTINGS. THE BOLLARDS SHALL BE A MINIMUM OF 4' ABOVE GRADE. BOLLARDS SHALL BE PLACED NO MORE THAN 4' APART.

AREO-POWER
UNITIZED FUELER,INC.
103 SMITHTOWN BLVD
SMITHTOWN, NY 11787

DRAWING TITLE
500 GAL GENERIC
FUEL OIL TANK
FOR SUFFOLK COUNTY

REV	DATE	BY	REVISION DESCRIPTION

ALL RIGHTS RESERVED. THIS DRAWING OR ANY PART THEREOF MUST NOT BE REPRODUCED IN ANY FORM WITHOUT WRITTEN PERMISSION OF AREO-POWER UNITIZED FUELER, INC.

DWG NO: SC500FOB	
SCALE: NOTED	DWN BY: JF
SHEET: 1 OF 1	DATE: 5/96