NOTE :
ALL RIGHTS RESERVED. THIS DRAWING OR ANY PART THEREOF MUST NOT BE REPRODUCED IN ANY FORM WITHOUT THE WRITTEN PERMISSION OF HIGHLAND TANK.
HIGHLAND TANK SHALL BE RESPONSIBLE ONLY FOR ITEMS INDICATED ON THIS FABRICATION DRAWING UNLESS OTHERWISE NOTED. CUSTOMER IS RESPONSIBLE FOR VERIFYING CORRECTNESS OF SIZE / LOCATION OF FITTINGS , ACCESSORIES & COATINGS SHOWN ON THIS DRAWING

NOTE:
POLYURETHANE ACT-100-U TANK IS NOT APPROVED FOR THE STORAGE OF HEATED PRODUCTS

NOTE:
TANK HAS 30 YEAR LIMITED WARRANTY THROUGH STEEL TANK INSURANCE COMPANY

FITTING SCHEDULE

A= 3" ø NPT WITH 3" x 2" NYLON BUSHING
B= 3" ø NPT WITH 3" x 2" NYLON BUSHING
(FITTING FOR LEAK DETECTION W/ INTERNAL PIPE)
C= 5" ø NPT WITH 5" x 4" NYLON BUSHING

GENERAL NOTES

CAPACITY : 240 GALLONS
TYPE : I 38D DOUBLE WALL , ACT-100-U, UNDERGROUND
NO. REQ. :
MATERIAL : MILD CARBON STEEL
TEST : 5 P.S.I.
MIN. GAUGE OR THICKNESS (PER U.L. 58):
(BASED ON 50" MAX. BURIAL DEPTH)
INNER HEADS : 10 GA. OUTER HEADS : 10 GA.
INNER SHELL : 10 GA. OUTER SHELL : 10 GA.
PAINT :
INTERIOR : NONE
EXTERIOR : SP-6 BLAST, COAT WITH 70 MILS OF POLYURETHANE
CONSTRUCTION : FLAT FLANGED HEADS, LAP WELD ALL EXTERIOR SEAMS ONLY
APPROVED LABELS : U.L. 58, ACT-100-U, H.T. STICKER
- 15000 VOLT SPARK TEST PROVIDED AT FACTORY

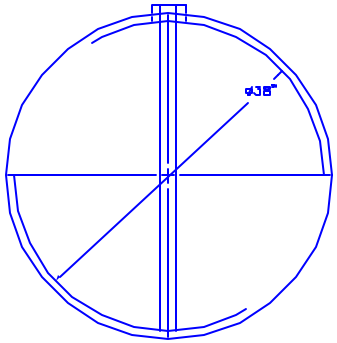

END VIEW

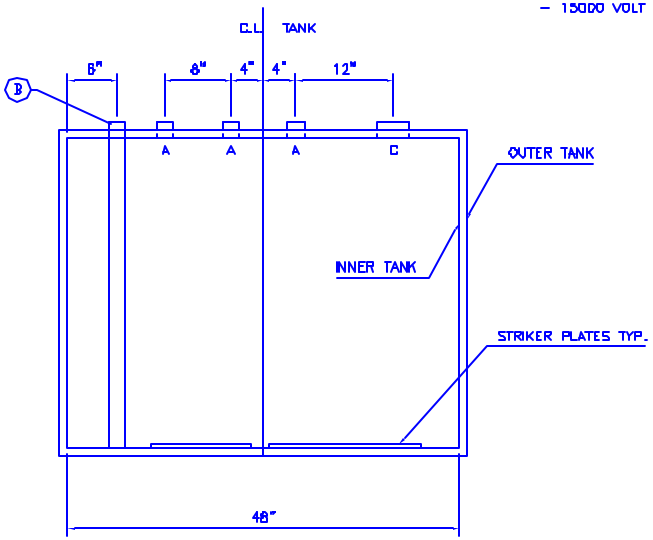

ELEVATION

AREO-POWER
UNITED FUELER, INC.
103 SMITHTOWN BLVD
SMITHTOWN, NY 11787

DRAWING TITLE

ACT-100U
240 GAL U/G
TYPE 1 D/W

REV	DATE	BY	REVISION DESCRIPTION

ALL RIGHTS RESERVED. THIS DRAWING OR ANY PART THEREOF MUST NOT BE REPRODUCED IN ANY FORM WITHOUT WRITTEN PERMISSION OF AREO-POWER UNITED FUELER, INC.

DWG NO: 240 DWI A100U	
SCALE: 3/4"=1"	DWN BY: HT
SHEET: 1	DATE: 11/1/02