NOTE: ALL RIGHTS RESERVED. THIS DRAWING MUST NOT BE REPRODUCED IN ANY FORM WITHOUT THE WRITTEN PERMISSION OF AREO–POWER.
AREO–POWER SHALL BE RESPONSIBLE ONLY FOR ITEMS INDICATED ON THIS FABRICATION DRAWING UNLESS OTHERWISE NOTED. CUSTOMER IS RESPONSIBLE FOR VERIFYING CORRECTNESS OF SIZE AND LOCATION OF FITTINGS, ACCESSORIES, AND COATINGS SHOWN ON THIS DRAWING.

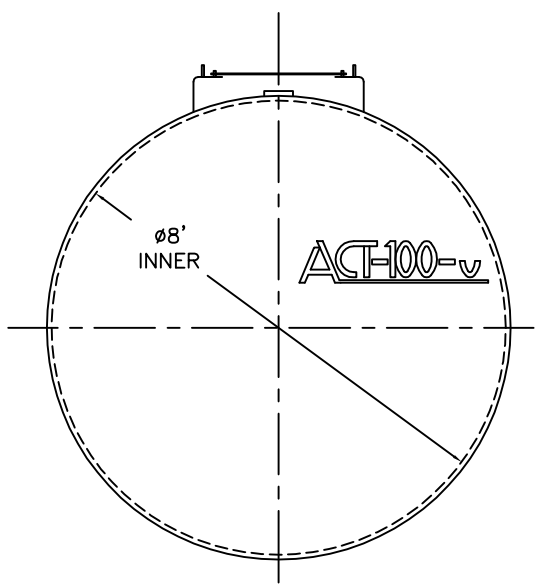

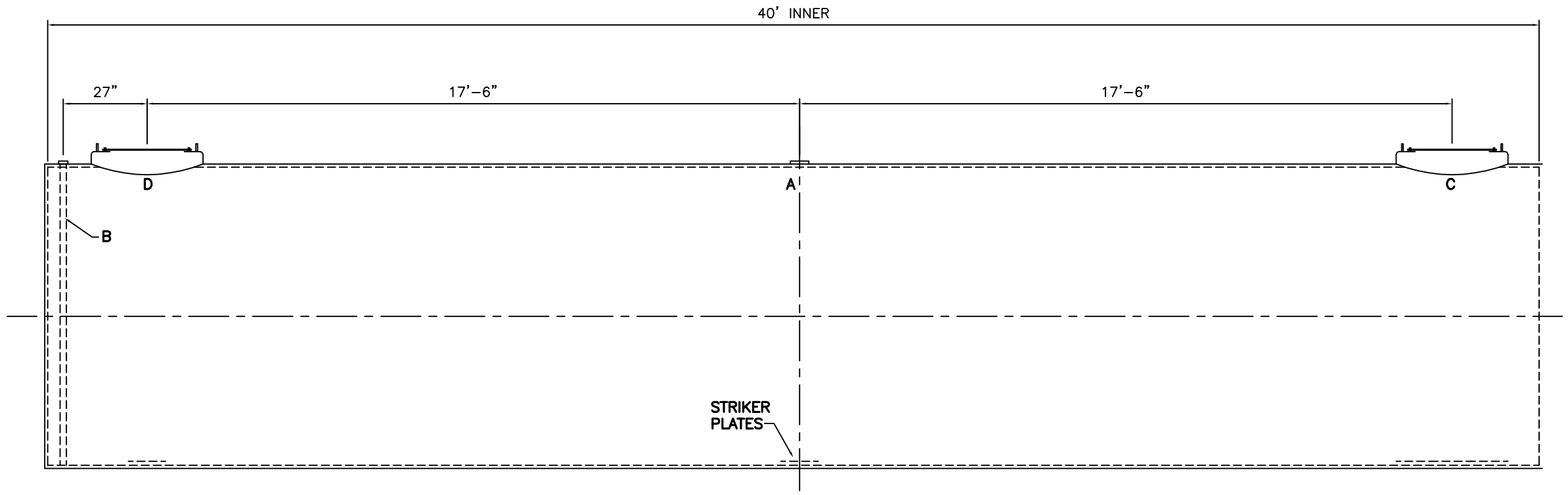

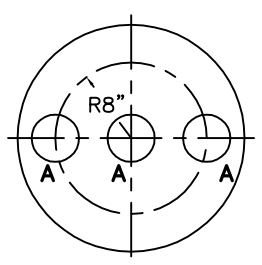

LID DETAIL C

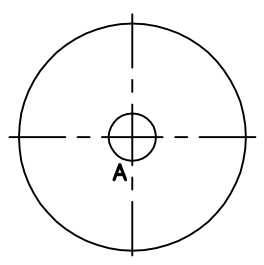

LID DETAIL D

SPECIFICATIONS

CAPACITY – 15,000 GALLONS

TANK MATERIAL – MILD CARBON STEEL
THICKNESS – INNER – HEADS – 1/4" SHELL – 1/4"
THICKNESS – OUTER – HEADS – 7 GA SHELL – 10 GA

CONSTRUCTION – INNER – LAP WELD OUTSIDE ONLY
CONSTRUCTION – OUTER – LAP WELD OUTSIDE ONLY

TANK TEST – INNER – 5 PSIG
TANK TEST – OUTER – 2 PSIG AND FULL VACUUM

INT. FINISH – NONE

EXT. FINISH – SP6 BLAST, 70 MILS URETHANE COATING
PER sti SPEC. FACTORY SPARK TEST INCLUDED

LABEL – UL 58 & ACT–100–U DOUBLE WALL 360° TYPE I

FITTING LEGEND

A	5" FITTING WITH 5" X 4" DIELECTRIC BUSHING
B	3" FITTING WITH 3" X 2" DIELECTRIC BUSHING 2" INTERNAL INTERSTITIAL MONITOR PIPE
C	24" DOUBLE RING MANWAY W/ FITTINGS PER DETAIL
D	24" DOUBLE RING MANWAY W/ FITTING PER DETAIL
E	–
F	–

AREO–POWER ®

15,000 GAL 8'ø DW ACT–100–U

CUSTOMER: –

PROJECT: –

QUOTE: –

SCALE	DATE	DRAWN BY	DWG. NO.
5/16" = 12"	6/03/01	XXX	APAUDW15K8